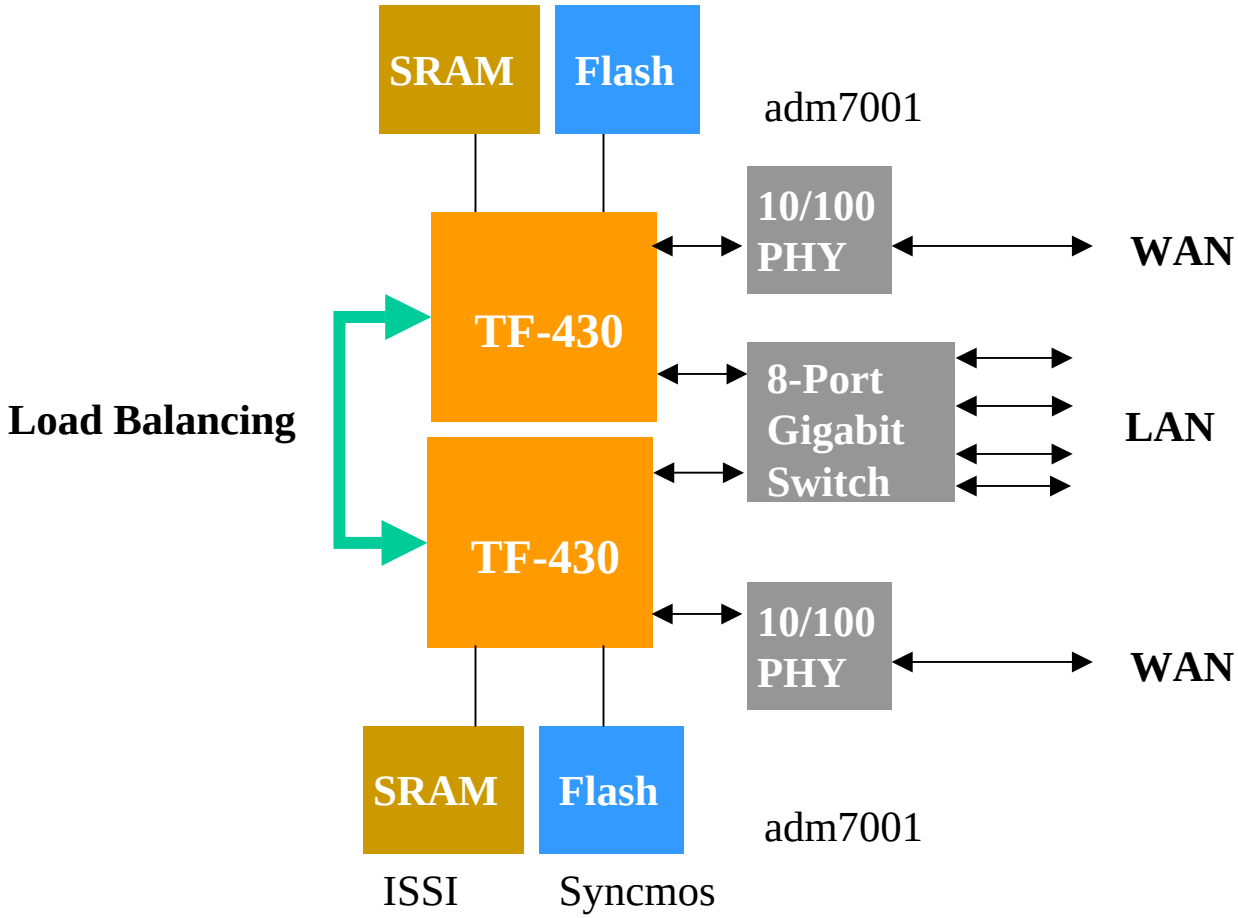Dual WAN Gigabit NAT Router with Home Portal Block Diagram